A Mechatronic State of Mind

Welcome to the Age of Information Where Flexible, Intelligent Drive Systems Separate the Haves from the Have Nots

Matthew Jaster, Senior Editor

In 2019, Lenze America relocated its electromechanical operations and logistics center from Glendale Heights, Illinois to its headquarters in Uxbridge, Massachusetts. Nothing mind boggling to report here as relocations in the manufacturing sector happen all the time, but the reason why the move was made is very telling as it illustrates a shift that's taking place across the mechanical power transmission industry.

Lenze made this move to bring its core operation, supply chain teams and management under one roof. This allowed the organization to incorporate its lean initiatives to its new electromechanical production lines. The move also helps serve Lenze's customers faster and more efficiently and gives the company an opportunity to expand its electromechanical product offerings.

In simpler terms, the relocation of business segments at Lenze reminds me of the change that's happening inside the mechanical components they sell. Versatility, efficiency, safety, and flexibility are all terms used to describe the changes happening in the gear drives, motors and electronics we cover in the pages of this magazine. Call it Mechatronics 101. This is the future of machining. It's what an economy driven by technology *should* look like.

How is mechatronics changing the market on the PT component level? What does it *truly* mean to be a provider of a complete drive package? This article will examine these questions while also digging deeper into the application-focus that comes with mechatronic concepts as well as the push for more education and training in these areas today.

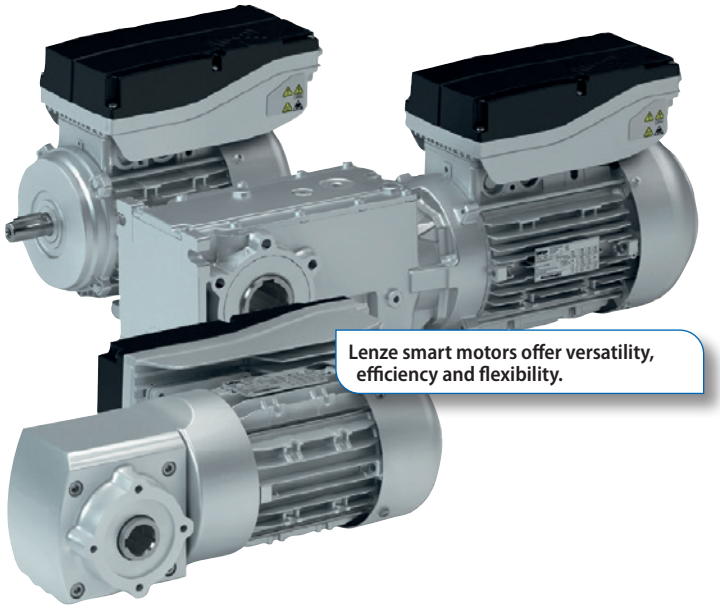

Lenze smart motors offer versatility, efficiency and flexibility.

NORD's nsd tupH gear unit and VFD.

The Drive Package

Mechatronics involves electrical and mechanical systems living in harmony, but there's much more taking place at the design level. Complete drive packages today include control systems, computer data, robotics, sensors, system engineering and more.

Dan Breitbarth, engineering manager, control products at NORD Gear Corp, said that the ability to provide a complete drive package—gearbox, motor and centralized/decentralized VFD, including networking capabilities—can greatly reduce installation costs for the end user and provide them with the peace of mind knowing everything will work in unison. It also provides the added benefit of there being a single point of contact in the unlikely event something goes wrong or when replacement parts are needed.

"Our goal is to provide flexible, intelligent drive systems that are pre-engineered for compatibility and adaptability. Our drive systems are powering hundreds of different applications around the globe, so it is vitally important to create intelligent drive solutions that are not only versatile, but easy to install, use, and maintain, regardless of the industry or application," Breitbarth said.

Bonfiglioli is another organization offering all-in-one mechatronic drive systems because its customer-base demands optimal machine design and performance.

"Systems—like DGM and iBMD—provide benefits such as streamlined and simplified design, system compactness, plant scalability, lower costs, as well as high remote-control potential thanks to the digitalization of communication," said Matteo Canepa, global product marketing and project management manager at Bonfiglioli.

At Lenze, the information and real-time data available from its components allows companies the ability to monitor areas like energy, service costs, production quality and safety. The ease of attaining this data is imperative for remote

Load Runners and Rail

Brands YOU Count On, People You TRUST.

Load Runners and Load Rail is the world's ultimate heavy-duty idler roller and rail solution providing a superior rolling surface and roller system. Manufactured in Richmond, Indiana, our products are designed to handle heavy loads in the toughest environments.

And, you can find **Osborn Load Runners and Rail** at your local **Motion Industries** location. Our local sales and service specialists are experts in providing application and technical solutions, with the choices and expertise you need to stay up and running.

osborn®

Scan Now to Learn More

https://tinyurl.com/u26begv

Brands you count on, people you trust…that's **Osborn Load Runners** and **Motion Industries**.

MOTION® INDUSTRIES

Keeping Industry in Motion

Call. 800-526-9328
Click. MotionIndustries.com
Visit. Over 550 Locations

diagnosis and maintenance and can be stored in order to provide predictive services in the future.

SEW Eurodrive continues to offer mechatronic solutions. By combining the motor, gear unit and electronics into a single system, SEW's MOVIGEAR brand focuses on optimizing power, storage reduction, lowering noise emissions and reducing the operating costs of material handling systems.

What do all these organizations have in common when it comes to mechatronic drive systems? They offer an opportunity to deal with a single supplier for system configuration, sales, troubleshooting, maintenance, and replacement parts.

"The power transmission industry values many of the same things as other industries. They want quality products in terms of reliability, durability, and performance. They want the ability to customize solutions to their specific requirements. They want integrated solutions that are easy to install, operate, and maintain. The reason they want these things is because their business depends on it. Manufacturers that can't deliver on these items won't find much success," said Tom Koren, director of engineering, NORD Gear Corp.

"Our role is crucial," said Canepa at Bonfiglioli. "Mechatronics is the way to optimize machines and their performances. In addition, when drives are selected, they influence all the characteristics and the degrees of freedom of the electro-mechanic powertrain applied. So, the opportunity to have a unique supplier for a mechatronic solution is vital for the customer experience."

Application Intelligence

For everyone interviewed in this article, mechatronics is shifting from product centricity to an application perspective. Canepa calls these 'all-in-one solutions' where systems like DGM and iBMD can cover 0.25 to 22 kW in a compact design. Both solutions are sensorless, with a dedicated vector control algorithm able to determine speed, torque and position of the application. The technology trends are to increase performances in a reduced dimension, enhance modularity and expand connectivity.

"The main players in our industry are changing electromechanical products through new mechatronic solutions—reshaping the PT market and accelerating the pace of change along the way," Canepa added.

This is happening at Bonfiglioli by merely looking at a traditional geared motor in the company's catalog. "Mechatronic drives are extending the lifetime of our traditional geared motors by reducing the mechanical stress of each component," Canepa said. "Ideally an additional benefit for our customers is the ability to gather data to finally improve both design and performances of their machines, meanwhile customers of our customers are driven by all the opportunities of Industry 4.0 an IIoT (remote monitoring, predictive and proactive maintenance, etc.)"

Smart manufacturing and IIoT puts actionable data front and center. It's something NORD anticipated and started working toward years ago when rumors of the 4th Industrial Revolution began to surface.

"As a result, NORD drive units are networked, autonomous, and scalable. The key components are the VFD units with their powerful processors and comprehensive equipment, interfaces, and functions. They not only monitor themselves and the motor, but also the effect on the load situation in plant segments and beyond," Breitbarth said.

The integrated PLC processes data from sensors and actuators. If necessary, it initiates a control sequence and communicates drive and application data to the control center and other networked components.

For example, intelligent sequence controls can enable the drive unit to independently decide on a branch position and act accordingly. The drive units can also communicate with each other: "Attention, I am sending a package in your direction. Start your conveyor belt." A follower drive can synchronize to a master for a particular task and then return to normal operation. Hundreds of typical functions are saved as parameter sets and can be simply adopted, Breitbarth added.

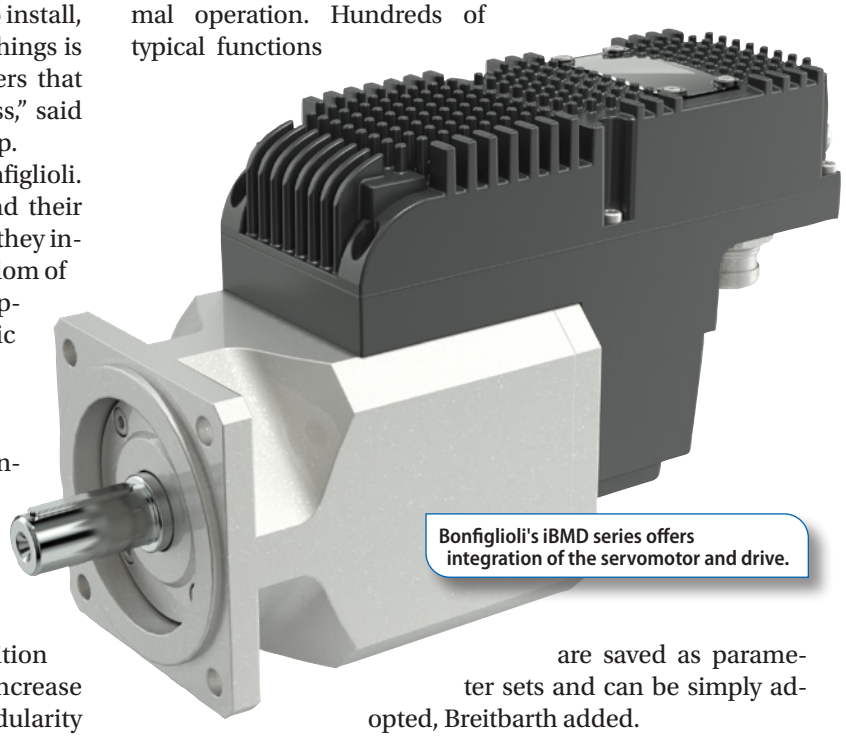

Bonfiglioli's iBMD series offers integration of the servomotor and drive.

"In terms of specific gear units, we're seeing an increasingly strong preference from our intralogistics customers for helical bevel units, which provide gear efficiency ratings in the 95%+ range, over the traditional worm gearboxes, whose gear efficiency ratings can dip as low as 40%," said Koren.

For companies replacing worm units with helical bevels, the tremendous boost in efficiency they'll receive could allow them to reduce the physical size of their gearboxes and power demand of their motors for the same power output of the system.

"For example, if you have a 45% efficient worm unit with a 10 hp motor input you're only getting 4.5 hp on the output side of the gearbox. You could use a 95% efficient helical product at 5 hp and produce the same ratings on the output. When multiplied by hundreds or thousands of gearboxes, there's the potential to realize significant savings in electrical costs and equipment costs using the smaller units," Koren added.

SEW's MOVIGEAR combines the gear unit, electronics and motor into a single drive system for the customer. This

essentially reduces the number of variants in a material handling system, for example, and gives the company the ability to create and develop standard modules and systems the customer can incorporate to optimize the application. The result is a 50+ percent energy savings on the equipment.

Combining optimally matched components into one product reduces project planning to a small number of interfaces. In addition, pre-prepared system information and optimized logistics ensure faster delivery times. The minimized connection outlay and preset control electronics enable exceptionally fast production startup. Manufacturing at the push of a button thanks to a network of components that are in constant communication with each other provides a series of practical engineering benefits.

Education & the Flexible, Autonomous Employee

In addition to the company's move in the United States, Lenze broke ground in 2018 on a Mechatronic Competence Campus (MCC) in Extertal, Germany. Lenze is particularly determined to improve collaboration—from brainstorming to product development, prototype construction and pilot series, through to series production. A central element of the development site is a technical center where various departments will come together to collaborate on mechatronic solutions.

Industry 4.0 will be reflected in practice at the MCC. Networking and control are redesigned from the ground up, based on an SAP environment. Driverless transport systems will be used in production itself, while a modern high-bay storage facility with space for more than 16,000 pallets and over 15,000 containers will be directly connected. Around 300 Lenze drives will be mounted in logistics. It's a future that combines electrical and mechanical engineering solutions with automation, smart tools and production innovations.

Along with mechatronic campuses, companies like Siemens are providing certification programs to encourage a new way of thinking about mechanical engineering.

The Siemens Mechatronic Systems Certification Program (SMSCP) combines the German dual education system with Siemens' in-house know-how. It prepares students to work their way into the mechatronics field.

Students with an SMSCP certification are employees who are flexible, autonomous, and professional in his or her dealings with such complex systems. This system has been used in-house in Germany to train Siemens very own engineers. All SMSCP courses are designed to be integrated within a high school, college, or university curriculum, or to be implemented as continuing education.

Mechatronics is not only the marriage of electrical, mechanical, and computer technologies; it is also a philosophy for looking at systems. Under the systems approach, students learn about the complexities of the system in a holistic fashion. This allows them to easily transfer their knowledge to other systems, resulting in flexible and autonomous employees.

Watch closely as mechatronic courses and training programs continue to pop-up in the coming years at manufacturing facilities and universities here in the United States.

Putting it All Together

Although it's impossible to discuss mechatronics in depth in a few pages of a trade magazine, the main takeaway here is that many successful companies in the PT market are following the global electromechanical trends taking place in manufacturing today. A systematic approach to components is paving the way for the vast innovations and technologies to come.

"We think we'll see both an evolution and a revolution over the next decade. Features that our customers value today—energy efficiency, safety, configurability, versatility—will still be extremely important. We'll also see a strong push for more compact, lightweight products with smaller footprints. Developments with safety over Ethernet networks and dedicated safety systems will continue to have strong appeal," Koren said. "But the biggest change will likely revolve around new capabilities for continuous condition monitoring and predictive maintenance enabled by intelligent, digitally networked design for the Industrial Internet of Things including sensors, communication interfaces and integrated PLCs."

"The next generation of mechatronics will likely have some degree of learning capability and be able to automatically adjust to correct themselves. Other topics that will come to light in the future are RFID recognition and settings, single-cable solutions, and the ability to network bus via power cabling," Breitbarth added.

Canepa at Bonfiglioli believes their solutions will be more software centric.

"Nowadays the trend is from electro-mechanic to electronic, but we envision that tomorrow the challenge will be from electronics to software that enables value creation," he said. "The gearboxes and gear drives will be smarter having decentralized logic, sensors for interconnections. The efficiency will increase due to innovative materials and they will be smaller. All those new features will have a positive impact on both, performances and cost." **PTE**

For more information:

Bonfiglioli
Phone: (853) 334-3333
www.bonfiglioli.com

Lenze Americas
Phone: (508) 278-9100
www.lenze.com

NORD Gear Corporation
Phone: (888) 314-6673
www.nord.com

Siemens Industry Inc.
Phone: (847) 640-1595
www.siemens.com

SEW Eurodrive Inc.
Phone: (864) 439-8792
www.seweurodrive.com